DOLETA

WINDOW AND DOOR INSTALLATION INSTRUCTION

TABLE OF CONTENTS

1. GENERAL REQUIREMENTS

2. LOAD REQUIREMENTS

3. REQUIREMENTS FOR WINDOW OPENING

4. AREAS OF MOUNTING POINTS

5. THE LAYOUT OF THE LOAD-BEARING LININGS

6. MOUNTING TOOLS AND TECHNIQUES

7. MOUNTING TOOLS AND TECHNIQUES (INSTALLATION OF FIREPROOF WINDOWS)

- 7.1 Method of attachment and locations of anchorages
- 7.2 Construction of fireproof mountain juncture
- 7.3 Fireproof juncture

8. MOUNTING TOOLS AND TECHNIQUES (FOR ALUMINIUM STRUCTURES)

9. MINIMUM DIMENTIONS OF HOLES (FOR COUPLINGS) FOR FIXING THE FRAMES

10. CONSTRUCTIONS OF MOUNTING JUNCTURE

- 10.1 The inner zone of juncture
- 10.2 The functional zone of juncture
- 10.3 The outer zone of juncture

11. PREPARATION FOR THE INSTALLATION

12. INSTALLATION ORDER

13. INSTALLATION COMPLETION

14. COMMISSIONING OF INSTALLATION WORK

WINDOW INSTALLATION INSTRUCTION

Following the changes in the European Union directives, window manufacturers are obliged to pay additional attention to the quality of the installation of windows and doors. When choosing a high-quality product, it is necessary to provide with an energetically effective and hermetic installation system. After the product is installed properly and effectively, the longevity and efficiency of 80% is granted. All following requirements, solutions and proposals are developed in accordance with STR 2.05.20.2006 requirements for the installation of windows, doors and their constructions in buildings. These rules may be applied in accordance with the normative acts of the Republic of Lithuania for both renovated and newly built facilities. These rules only cover the mounting of windows, doors and their constructions in the openings, which had been prepared and agreed in drawings. The builder is responsible of the preparation and appropriateness of the openings, that is dealt with in the rules of the work execution. The integral part of the quality window is its installation, maintaining all declared characteristics, mounting the window to the constructional structure or to the indoor and outdoor guards.

1. GENERAL REQUIREMENTS

These rules shall be followed only when the requirements for window mounting are not specified in the construction documentation of the building. If the client does not provide with the project documentation, the window and door installation instruction of JSC „Doleta" shall be used. The instruction covers the entire procedure of the product acceptance in the facility, mounting of it and the passing to the client or his authorised representative. ***A window or its structure shall not be used as a support for building constructions***. The window must carry out its functions and securely transfer respective forces and loads to the building guards. With regard to the area of window integration into the guards, the higher is the window installed, the stronger will be forces affecting it. The installation work must comply with the main requirements of statics for the product.

2. LOAD TRANSFER

When the transfer of load is carried out, it is important to choose the correct method of mounting in order to distribute the forces appropriately. They must be safely directed to the building construction. The window shall not take over the building loads or be used as a support for the structure. The installed window or the whole window construction is affected by the following forces:

- Own weight.
- Horizontal and vertical load (also the dynamic load).
- The wind load.

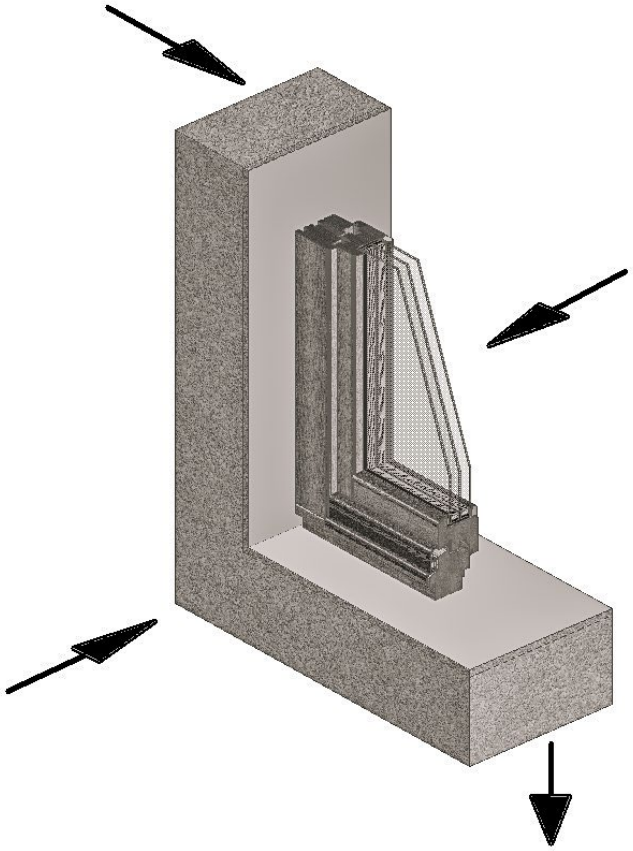

In addition to these loads, other forces occur which are caused by the above-mentioned factors:

- The attachment areas and the number of them.
- Temperature differences between the indoors and outdoors.
- The physical properties of mounting and sealing materials (flexibility, thermal expansion).
- Deflections of the frame profile.

3. REQUIREMENTS FOR THE WINDOW OPENING

These installation rules do not deal with the materials from which the opening should be prepared for mounting. That must be prepared by the builder when preparing the technical drawings. The rules of installation shall be limited to and shall be responsible for a safe mounting of window or door to the construction of the building. To form the opening and the preparation of it shall be the responsibility of the client. It is important to start the installation work only when the preparation of the opening is fully completed and neat. The surfaces of walls around the openings shall be without damage, dislodges, hollows. Defected areas must be fixed with constructional blends. During the installation the products shall be fully fitted to the exterior of the wall, the opening shall be made from solid and heat-insulating material. The opening shall be able to handle the load resulting from the product installation.

4. AREAS OF MOUNTING POINTS

Mounting areas are the connection for passing the load from the window to the construction structure.

These points are shown in the drawings. Their number can only be higher (in accordance with the situation), but not lower:

- The distances between the mounting points must shall not be greater than 700 mm.
- The distance from the corner of the window or mullion shall be not less than 150 mm and not greater than 200 mm.
- The additional mounting points are used for the exterior doors or for their construction and are designed to strengthen the construction of the product and to reach the objective targets (security).

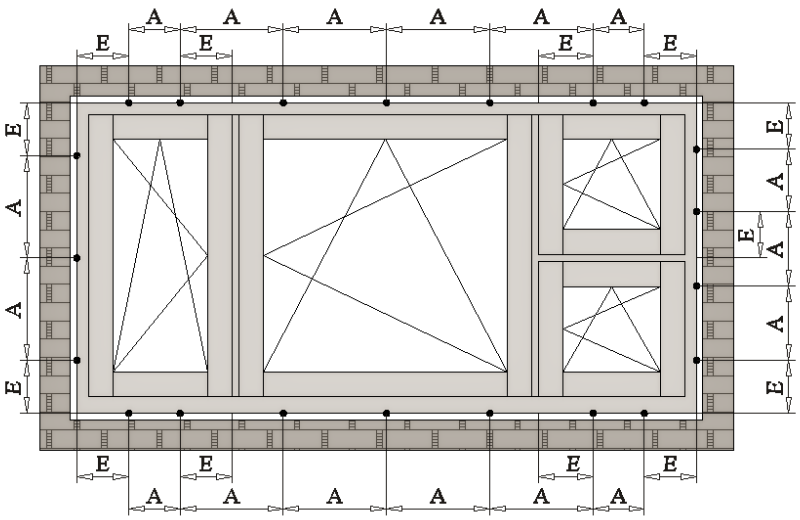

COMMENTS: • *– mounting points.*
A – distances not greater than 700 mm.
E – distances from 150 mm up to 200 mm.

5. THE LAYOUT OF THE LOAD-BEARING LININGS

Load-bearing linings are made for the positioning the window or its construction in the opening and to evenly transfer loads to the constructional structure. Linings should be used only for their intended purpose and according to the manufacturer‘s technical characteristics that meet all the dynamic loads and operating temperatures. The layout of the linings shall not interfere with the thermal expansion of the element. The lining must be placed in the juncture and kept there for the unlimited period, isolated from humidity and shall not accumulate humidity also shall not interfere with the subsequent finishing works.

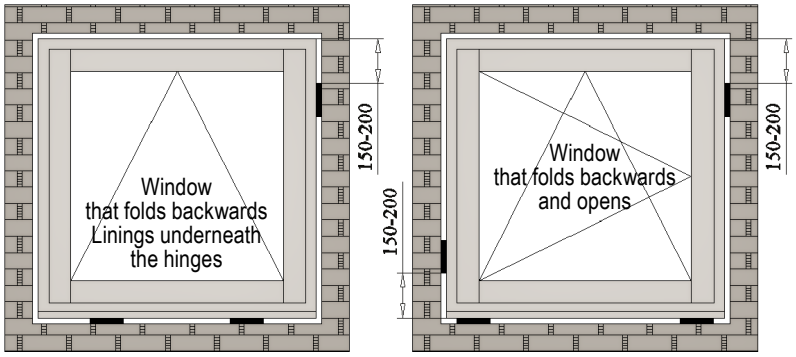

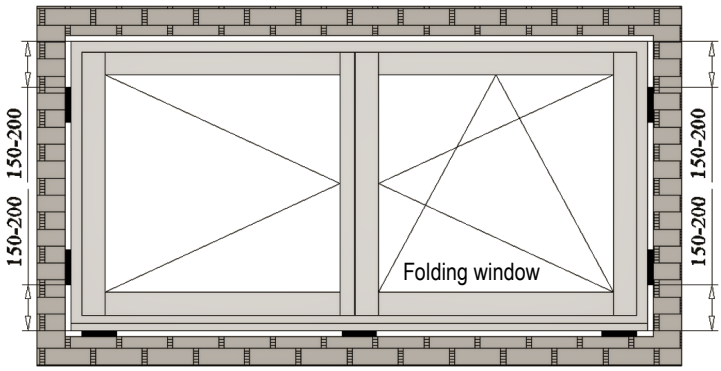

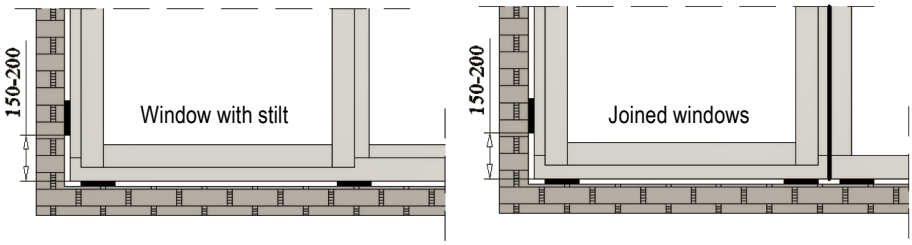

The layout of the load-bearing linings

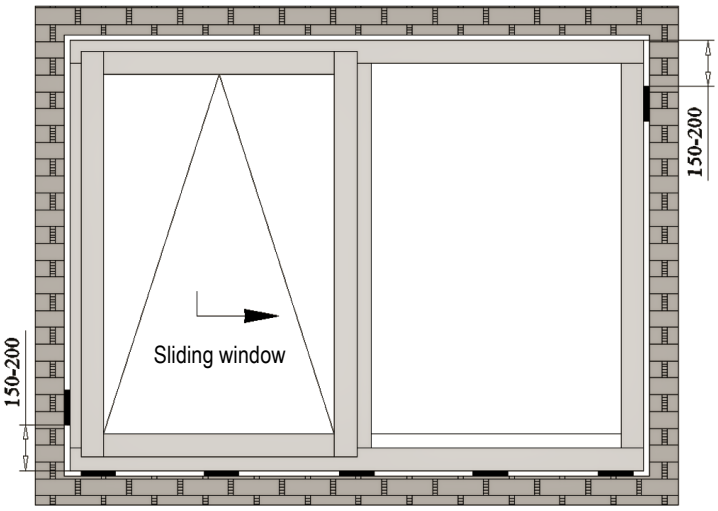

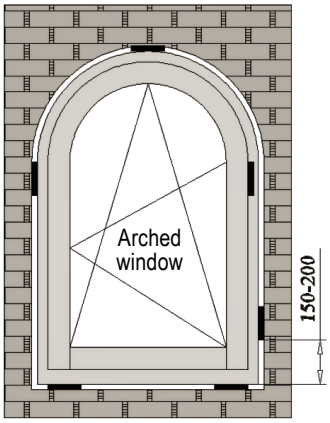

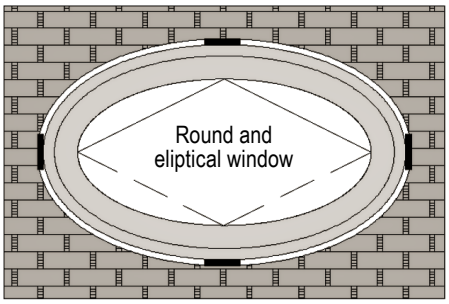

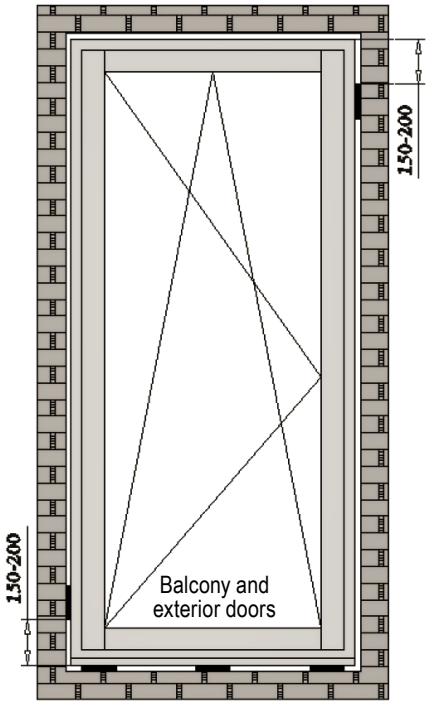

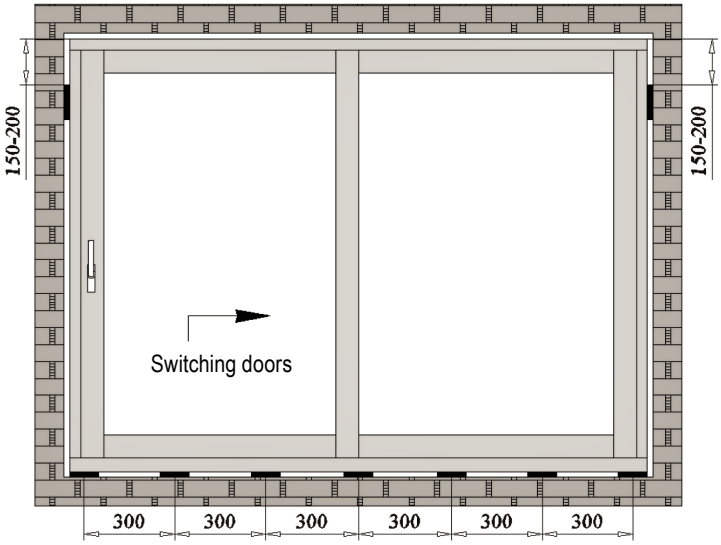

6. MOUNTING TOOLS AND TECHNIQUES

Mounting tools and techniques shall be selected according to the situation at the construction site. The selection of mounting tools and techniques depends on the type of building construction, the present situation at the construction site and the planned mounting method of the window to the structure of the wall. The chosen mounting tools reimburse the load of the wind and horizontal load. Sealing materials, sprayable sealants, polyurethane spray foam are not considered to be mounting materials. They have a different purpose. For a safe transfer of the forces from the window to the building, the frame can be mounted to the structure using a wide variety of mounting materials, which are sold in the market and have all the accompanying documents. In accordance with the manufacturers' instructions and recommendations for mounting.

Window mounting by anchors

The areas for mounting the anchors are selected in accordance with the provided schemes. The anchor mounting shall be chosen according to the type of anchor used and the type of building construction. The usage of hammering nails as fixing materials in windows and their specific structures is not allowed. The mounting of anchors in the wall made from hollow bricks shall be done only to the juncture zone or in accordance with the structure of the wall.

Mounting by masonry anchor - plate

That is a metal plate with drilled holes and one of them has an elongated shape. This method allows mounting to the desired position in the building construction. Masonry anchor can be folded as much as needed.

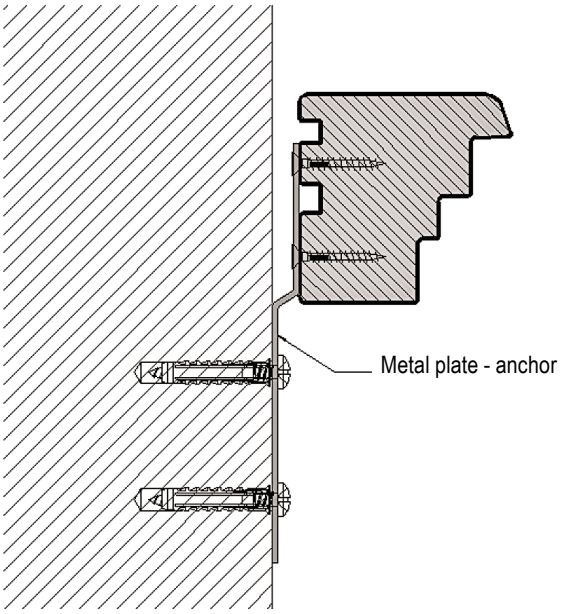

Mounting by edge iron (sticking out from the building wall)

The dimensions of edge iron, their layout and number shall be defined by the calculation carried out during the building design phase. It must be approved by the construction project manager. This mounting method is used when the window is mounted on the heat insulating layer. When using this method it is necessary to ensure that the frost bridges do not form. Mounting by using edge iron takes over vertical and horizontal loads of the window well. The window is mounted to the iron edge by using screws.

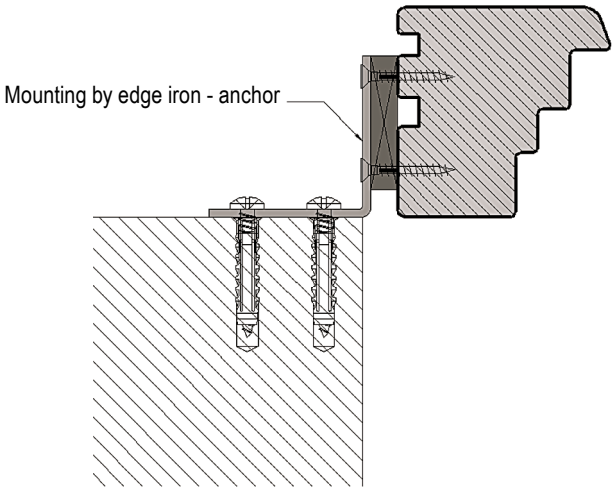

Mounting by the synthetic fibber plate (product sticking out from the wall)

The plate is fixed to the window by using screws. The required number of plates and their dimensions shall be defined during the building design phase, that must be approved by the project manager. The plate takes over the vertical and horizontal load well. When mounting in such a way, it is necessary as to ensure that the frost bridges do not form.

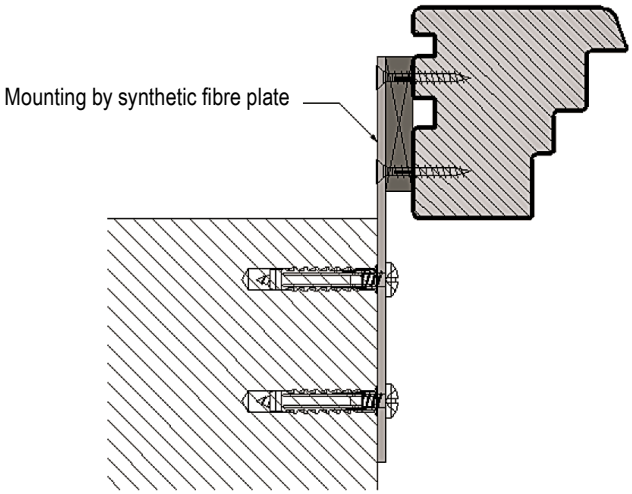

Mounting by drilling right through the frame

For this mounting method all forms of masonry nails and couplings can be used. The guidelines and instructions of the seller shall be followed. The window frame shall be mounted by using masonry nails and couplings only when it is fully adjusted.

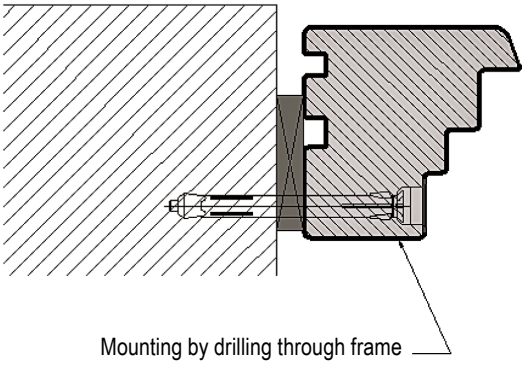

The combined mounting

That is the window mounting method when a several of the above-mentioned methods are used. When the construction of the wall requires to use multiple mounting methods and when the frame must be secured to ensure that the window operating load is securely transferred to the wall structures. There are two most commonly used methods for moving parts and securing the frame. Using the anchor – plates in the corners, additionally, any other from the above-mentioned methods according to the distances from the mounting schemes. The combined mounting method is also used because the sealing foam causes a certain amount of pressure, which adds to the window operating forces and transfers to the structure of the window. This directly affects the functionality of a window.

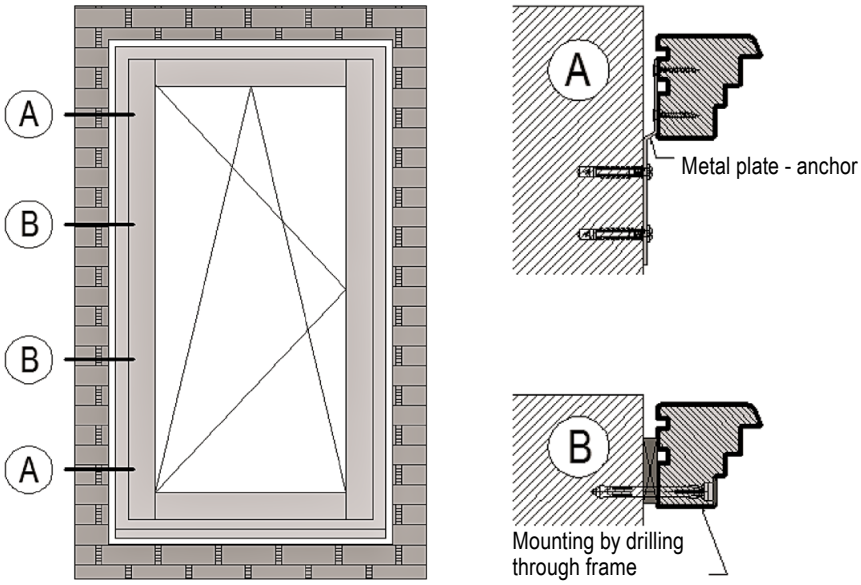

7. MOUNTING METHODS AND TOOLS
(Installation of fireproof windows)

7.1 Method of attachment and locations of anchorages

Fastened with a masonry anchor - a metal plate. This method allows the product to be attached to the building structure in the desired position. Mounting distance from the window corner or strut, not less than 150 mm and not more than 200 mm. The distance between the anchorage points must not exceed 700 mm.

7.2 Construction of fireproof mountain juncture

A sealed, energy-efficient mounting seam is required for professional installation. It must not deform the product frames. The recommended seam spacing is **10-30 mm.** Use all sealing materials only in accordance with the manufacturer's instructions and recommendations.

7.3 Fireproof juncture

It is the space between the window frame and the wall structure, completely filled with material to insulate sound and heat. These properties must remain unchanged indefinitely, thus the area must remain dry and isolated from the immediate climate of the room. Only **stone wool** can be used to insulate this zone. It performs a non-combustible window connection to the wall structure. The joint insulation material must be elastic and strong enough to withstand structural displacements in the joint.

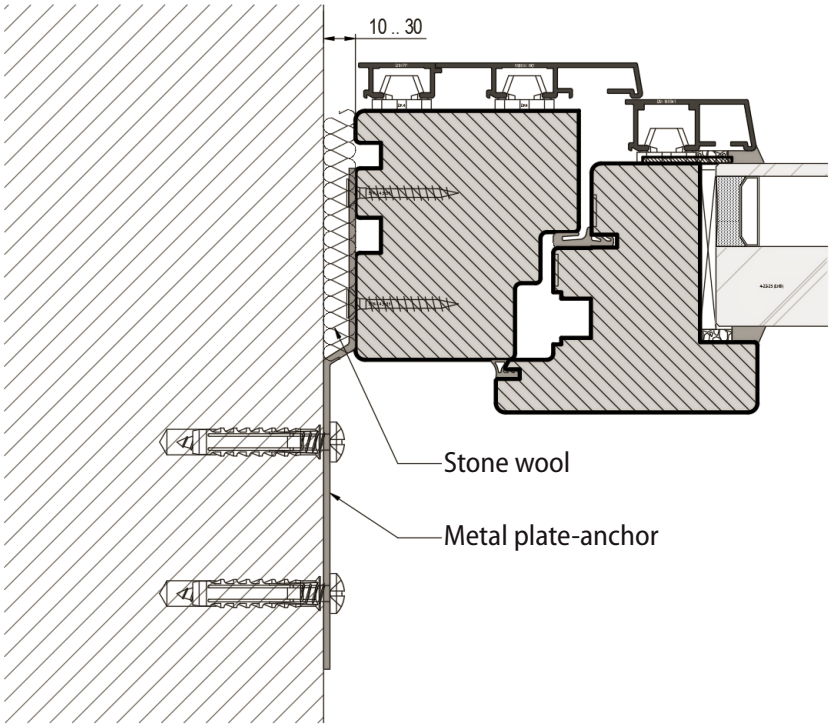

8. MOUNTING METHODS AND TOOLS
(for aluminium structures)

When installing aluminium windows and doors the same methods and tools shall be used. It is important to safely move the operating load from a window, door to the building structures. There are a few notes to be observed:

- During the installation of aluminium windows and doors, the contact between aluminium profile and other metals (steel, copper and its alloys, lead) should be avoided. These listed metals in humid environment due to the electrochemical reaction may cause the corrosion of aluminium (including the anodised aluminium).
- Aluminium also must be protected from the lime, cement and all other aggressive materials used in construction.
- When installing doors, it is recommended to put the PVC profile underneath the threshold connecting it with the insulation of the foundation.
- During the installation, the fixing elements of window or door frames shall be fitted to aluminium, mounting to the plastic thermal bridge is not recommended.
- When installing complex aluminium structures, more information about the specifics of mounting and fixing of aluminium profile systems shall be provided by the suppliers.

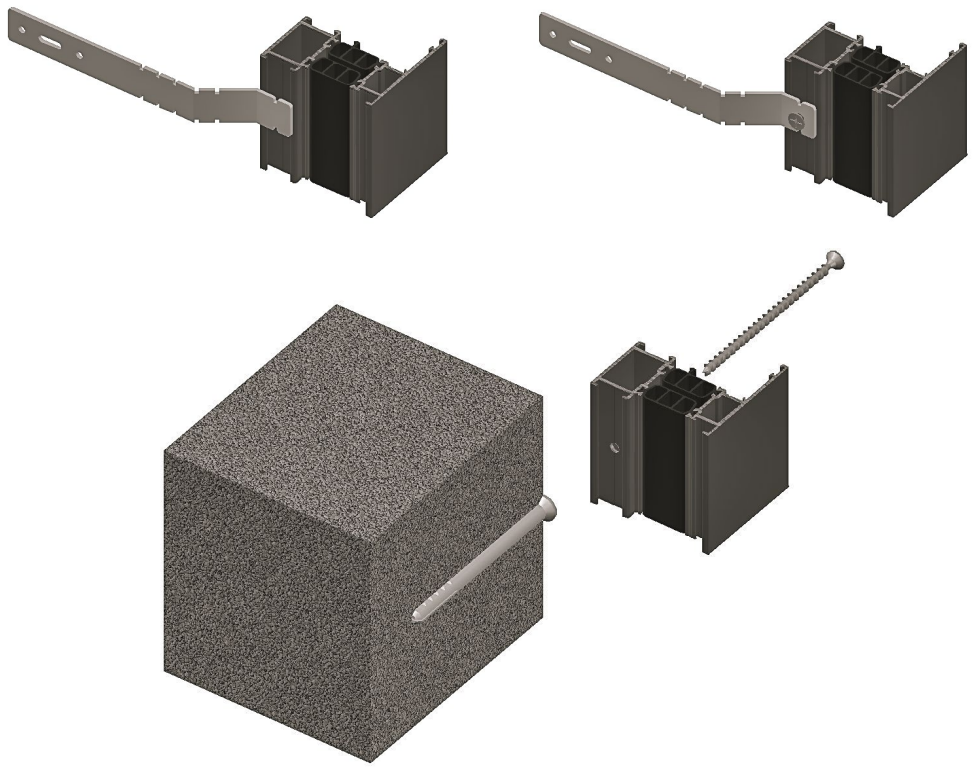

9. MINIMUM DIMENSIONS OF HOLES (FOR COUPLINGS) FOR FIXING THE FRAMES

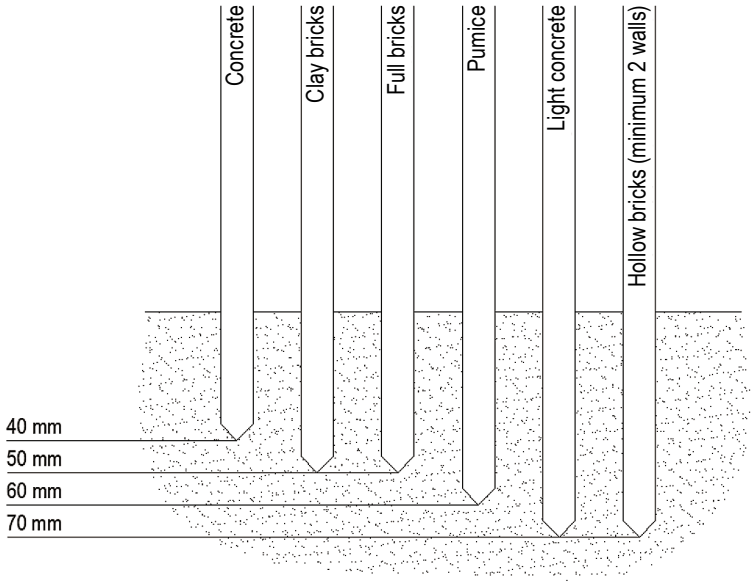

10. CONSTRUCTIONS OF MOUNTING JUNCTURE

For a professional installation a hermetic, energy-efficient mounting juncture is necessary. It cannot deform the frames of the product. The recommended juncture gap is 10-30 mm. All materials for sealing and hermetic sealing shall be used only in accordance with the manufacturer‘s instructions and recommendations. The juncture is affected by different factors, so it is divided into three zones:

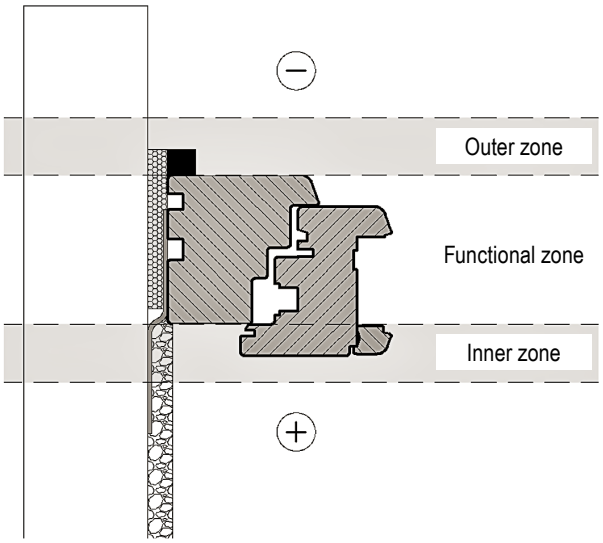

10.1 The inner zone of juncture

That is the separation of internal and external climate. Its main function is to prevent leaks. It must be more hermetic than external sealing. The separation of internal and external facilities must be carried out in the continual perimeter of juncture. The temperature of internal juncture must be higher than the temperature of “dew point”. The inner zone prevents from the steam, which is present in the premises, diffusion to the insulation zone. To achieve this effect, a hydro-insulating, steam-proof or universal tape can be used. If surfaces of the wall structures are uneven, additional glue must be used.

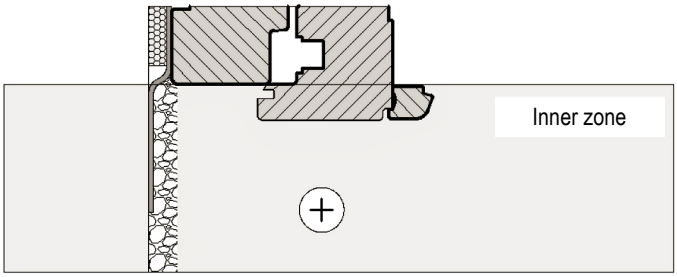

10.2 The functional zone of juncture

It is the gap between the window frame and wall construction, fully filled in with material for sound and heat isolation. These qualities must remain unchanged for an indefinite period, so this area should remain dry and separate from the direct room climate. For the isolation of this area the following substances can be used:

- Sealing foam.
- Glass wool.
- Stone wool.
- Sealing tape.

All of the listed materials listed may not be considered as mounting materials. Their function is to attach the window to the wall structure in a safe way. The material for the juncture insulation must be elastic and strong enough to withstand the structural shifts inside the juncture.

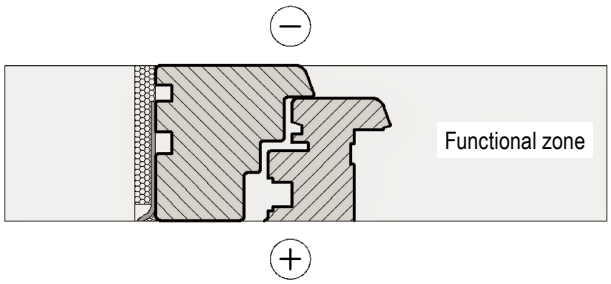

10.3 The outer zone of juncture

The function of this zone is to carry out the long-term atmospheric protection. It protects from temperature changes, rain, wind and UV rays. Also, an important feature of this zone is the permeability of steam and the zones of functional juncture.

The following materials can be used for this juncture zone:

- Expandable tape.
- Hydro-insulating tape.
- Insulating fabrics.
- Steam permeable synthetic fabric tape.

When using the listed materials, it is necessary to check their compliance with the installation situation. To comply with the requirements and recommendations for use of the materials.

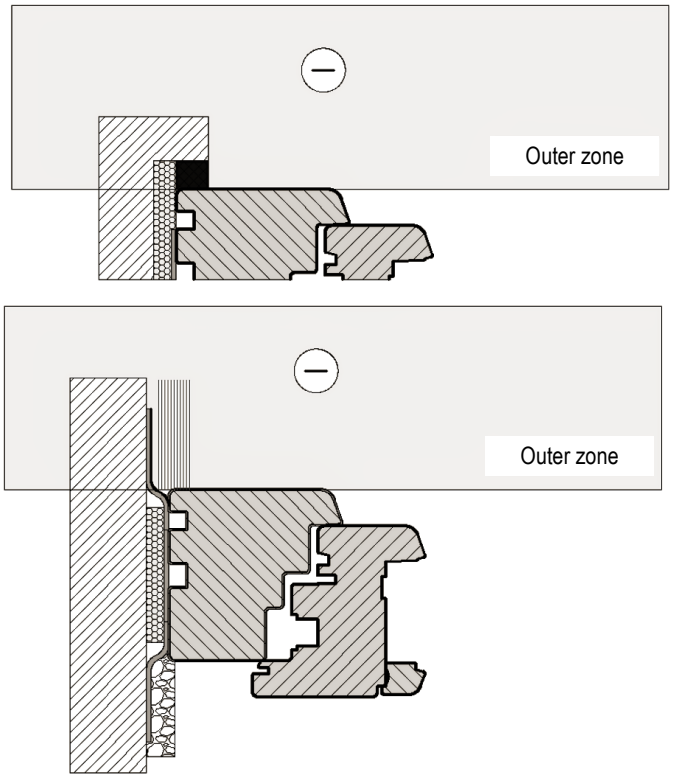

11. PREPARATION FOR THE INSTALLATION

Before starting the installation work it is necessary to check the following:

- Whether the window storage conditions at the construction site are suitable for the installa tion period.
- Whether the access to the window installation opening is appropriate and safe.
- Whether all the windows are delivered to the site in accordance with approved drawings.
- Whether the agreed and approved drawings, mounting junctures and positioning areas in the opening are in place.
- Whether the dimensions of the openings fit with the agreed dimensions of the products.
- Whether the mounting areas of the product are agreed with the client.
- Whether the openings are fully prepared for the window installation.
- To check the construction and condition of the partition walls.
- To check whether in all premises there are notes „meter mark“ (the responsibility of the builder).
- To find out whether there is a need for any special requirements, fencing in order to avoid mechanical damage, accidents or other incidents during the construction.
- To coordinate the safety of products, materials during the installation.
- Whether the installation documentation with detailed descriptions of the building layout is provided.
- If the drawings of facade contain the altitudes of installation, the installer must check that the openings correspond to the ones detailed in the project. In case of non-compliance, the installer stops the work and informs the client. The adjustment is carried out by the client or architect, recorded by a written confirmation.
- If there are no specific mounting requirements from the client, the basic installation is carried out, which consists of the window mounting by selecting any of the mounting methods from Doleta installation instructions and sealing by using foam. Any other installation and sealing method must be described in a separate paragraph of the agreement, the types of outdoor and indoor sealing materials shall be defined.

12. ORDER OF INSTALLATION

Installation is carried out when all the preparation work is agreed. During the removal of old windows in usable premises, it is necessary to protect the furniture, floor, etc., from potential damage. The utilisation of old windows is a special service, and payment shall be made under a separate agreement (if that was not agreed). The opening sides must be clean from rubbish and dust.

Then, the installation is carried out according to the following order:

- The layout of linings.
- Positioning of the frame in the opening.
- The temporary mounting of the frame in the opening.
- The exact alignment of the frame by using measurement devices.
- Mounting to the partition structure or masonry wall.
- The completion of mounting juncture.
- Sealing of the functional juncture (internal and external).
- Window and door alignment and functional check after the installation.

NOTE: *The execution order for the preparation of mounting juncture may vary depending on what materials will be used.*

13. THE COMPLETION OF THE INSTALLATION

On the completion of installation works all doors and windows must remain undamaged, clean and functional. Any damage of any of products, shall be recorded by a photograph, in writing, informing the end user or seller. The work area should be tidy, all leftover materials and rubbish should be collected, utilised or in accordance with a separate agreement left at the site in the area specified by the client. The protective film should be removed from the windows. If they are kept, this must be noted in writing in the work acceptance deed. Protective film is not designed for long-term use due to temperature changes and exposure to the sun.

14. COMMISSIONING OF THE INSTALLATION WORK

The commissioning of the installed windows is carried out after the completion of all work under the agreement. In cases of the larger scale work, the commissioning may be carried out in stages, as provided for in the installation agreement.

During the commissioning the following must be checked:

- The installed product location must conform to the building design documentation.
- The mounting made in accordance with the agreed drawings.
- Products must perform all of the defined functions (opening, lock, etc.). Hinged products must function without trouble.
- The position of installed products in the partition system or masonry wall (horizontal and vertical). The inspection can be carried out by using all of the measurement devices (with valid checks). The permissible deviations of the product up to 1.5 mm for a meter, but not more than 3.0 mm for a product.
- The frame of the product cannot be deformed or otherwise damaged during the installation or by installation materials used.
- When mounting a large batch, quality checks may be performed selectively by checking several products under a separate agreement provided for in the contract, it shall be deemed that an all installed products on that day are installed correctly. The products are functional (adjusted), mechanically undamaged, aesthetically sound.
- The installation work is completed with the commissioning by means of the signature of the acceptance deed, adding all comments and defects and specifying the dates of their correction.

NOTE: *The manufacturer is responsible for the quality of products after the installation work only if the installation was performed by factory-trained personnel.*

The guarantee is granted subject to full settlement in accordance with the contract, after signing the acceptance deed.

WINDOWS FOR YOUR LIFESTYLE